Toyana Bearing Manufacturing of Canada

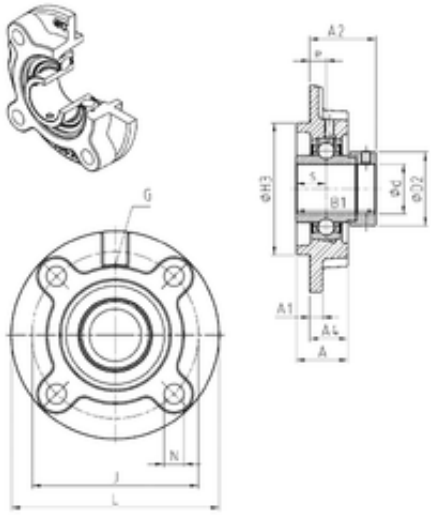

EXFC207 Bearing 2D drawings and 3D CAD models

SNR EXFC207 bearing units

Bearing No. EXFC207

Bore Diameter	35 mm
d	35 mm
H3	90 mm
A4	26 mm
e	11 mm
s	18,8 mm
A	34 mm
A1	9 mm
B1	51,1 mm
D2	55,6 mm
J	110 mm
L	135 mm
N	14 mm
Thread (G)	M6x1
A2	43,3 mm
Weight	1,8 Kg
Basic dynamic load rating (C)	25,7 kN